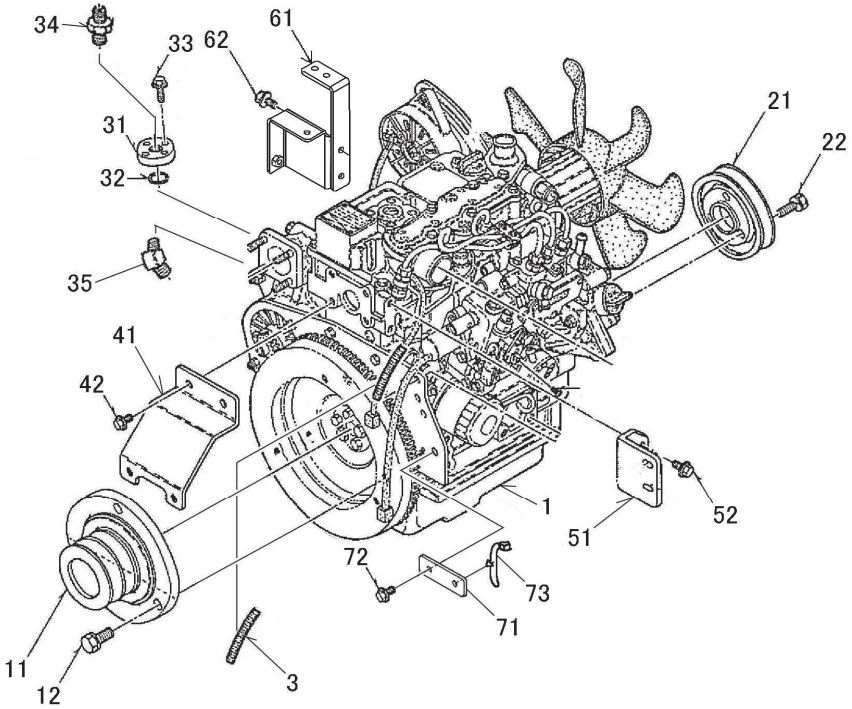

No.	Parts No.	Name	Quantity	Note
1	01001-B51-001	ENGINE, 3TNV70-XSR	1	
3	91382-1301001	CORRUGATE 13×100	1	
10	-	-		
11	02901-B51-000	PULLEY, ENGINE	1	
12	93000-1203017	BOLT, SPECIAL 12×30	3	
20	-	-		
21	02902-B54-000	PULLEY, ENGINE	1	
22	93000-1003017	BOLT, SPECIAL 10×30	3	
30	-	-		
31	51903-B84-000	FLANGE, HYDRAULIC	1	
32	98310-02024	RING O, P20	1	
33	93100-0601617	BOLT, FLANGE 6×16	4	
34	51902-B84-001	ADAPTER, HOSE PT3/8×PF1/2	1	
35	51901-B84-000	JOINT, ELBOW PF3/8×PF1/4 45°	1	
40	-	-		
41	65100-B51-001	BRACKET COMP, BELT STOPPER	1	
42	93100-0801617	BOLT, FLANGE 8×16	2	
50	-	-		
51	02903-B51-000	STAY, MUFFLER	1	
52	93100-0801617	BOLT, FLANGE 8×16	2	
60	-	-		
61	05200-B84-000	STAY COMP, MANIFOLD	1	
62	93100-0802017	BOLT, FLANGE 8×20	2	
71	73904-B51-030	WASHER, PLATE	1	
72	93100-0801217	BOLT, FLANGE 8×12	1	
73	91314-119P7	STRAP, CABLE 1-19P7	1	

ENGINE BASE

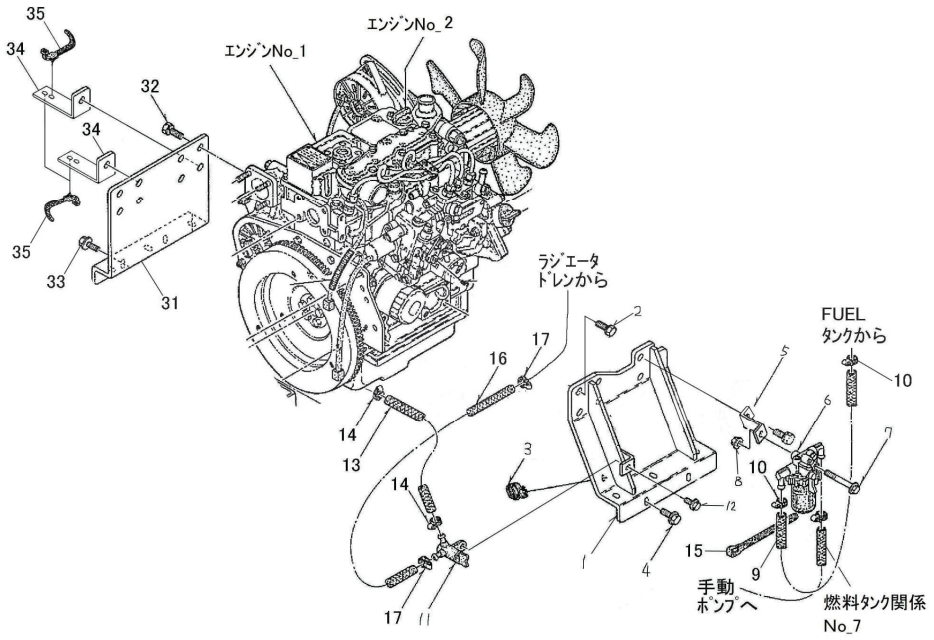

ENGINE BASE

No.	Parts No.	Name	Quantity	Note
1	02100-B51-002	BASE L COMP, ENGINE	1	
2	93000-1002517	BOLT, SPECIAL 10×25	7	
3	91315-C1U68	CLIP, CABLE C-1U68	2	
4	93300-1002517	BOLT, FLANGE 10×1.25×25	5	
5	02907-B51-001	STAY, SEPARATOR	1	
6	129335-55700	SEPARATOR COMP, OIL	1	
7	93100-0807017	BOLT, FLANGE 8×70	1	
8	94002-08410	NUT, FLANGE 8	1	
9	91543-0750781	HOSE, BLADE 7.5×780	1	
10	91321-12	CLAMP, HOSE 12	2	
11	129150-49100	COCK COMP, THREE WAY	1	
12	93100-0801617	BOLT, FLANGE 8×16	1	
13	91543-0750281	HOSE, BLADE 7.5×280	1	
14	91321-12	CLAMP, HOSE 12	2	
15	91311-140	BAND, REPEAT RF140	1	
16	91543-0750851	HOSE, BLADE 7.5×850	1	
17	91321-12	CLAMP, HOSE 12	2	
30	-	-		
31	02200-B84-001	BASE R COMP, ENGINE	1	
32	93000-1002517	BOLT, SPECIAL 10×25	8	
33	93300-1002517	BOLT, FLANGE 10×1.25×25	5	
34	51905-B84-000	STAY B, HOSE	2	
35	91314-11765	STRAP, CABLE 1-1765	3	

MUFFLER & AIR CLEANER

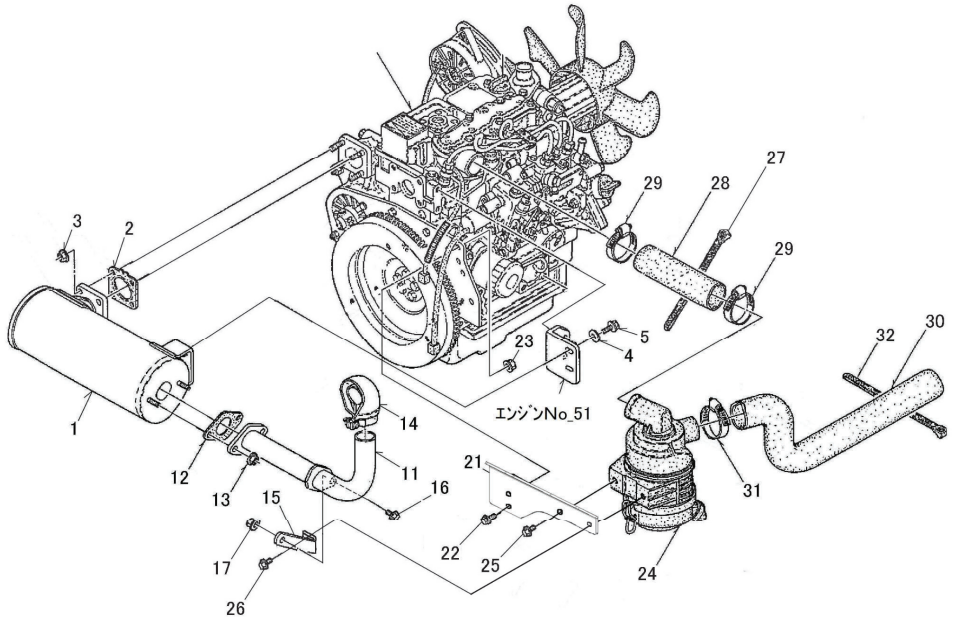

MUFFLER & AIR CLEANER

No.	Parts No.	Name	Quantity	Note
1	129065-13500	SILENCER	1	
2	129004-13200	GASKET, SILENCER	1	
3	94002-08410	NUT, FLANGE 8	4	
4	94101-08015	WASHER, PLAIN 8	2	
5	93100-0802017	BOLT, FLANGE 8×20	2	
7	-	-		
11	02300-B84-000	PIPE COMP, EX	1	
12	129107-13550	GASKET, MUFFLER CAP	1	
13	94002-08410	NUT, FLANGE 8	2	
14	105198-13610	CAP COMP, MUFFLER	1	
15	02901-B84-000	STAY, EX PIPE	1	
16	93100-0801617	BOLT, FLANGE 8×16	1	
17	94002-08410	NUT, FLANGE 8	1	
18	-	-		
20	-	-		
21	02904-B84-000	BRACKET, AIR CLEANER	1	
22	93100-0802017	BOLT, FLANGE 8×20	2	
23	94002-08410	NUT, FLANGE 8	2	
24	119527-12500	CLEANER COMP, AIR	1	
25	93100-0801617	BOLT, FLANGE 8×16	1	
26	93100-0802017	BOLT, FLANGE 8×20	1	
27	91311-250	BAND, REPEAT RF250	1	
28	119527-12230	PIPE, INTAKE	1	
29	23000-060000	CLIP 60, HOSE	2	
30	119527-12020	HOSE, INTAKE	1	
31	23000-060000	CLIP 60, HOSE	1	
32	91311-250	BAND, REPEAT RF250	1	

FUEL TANK

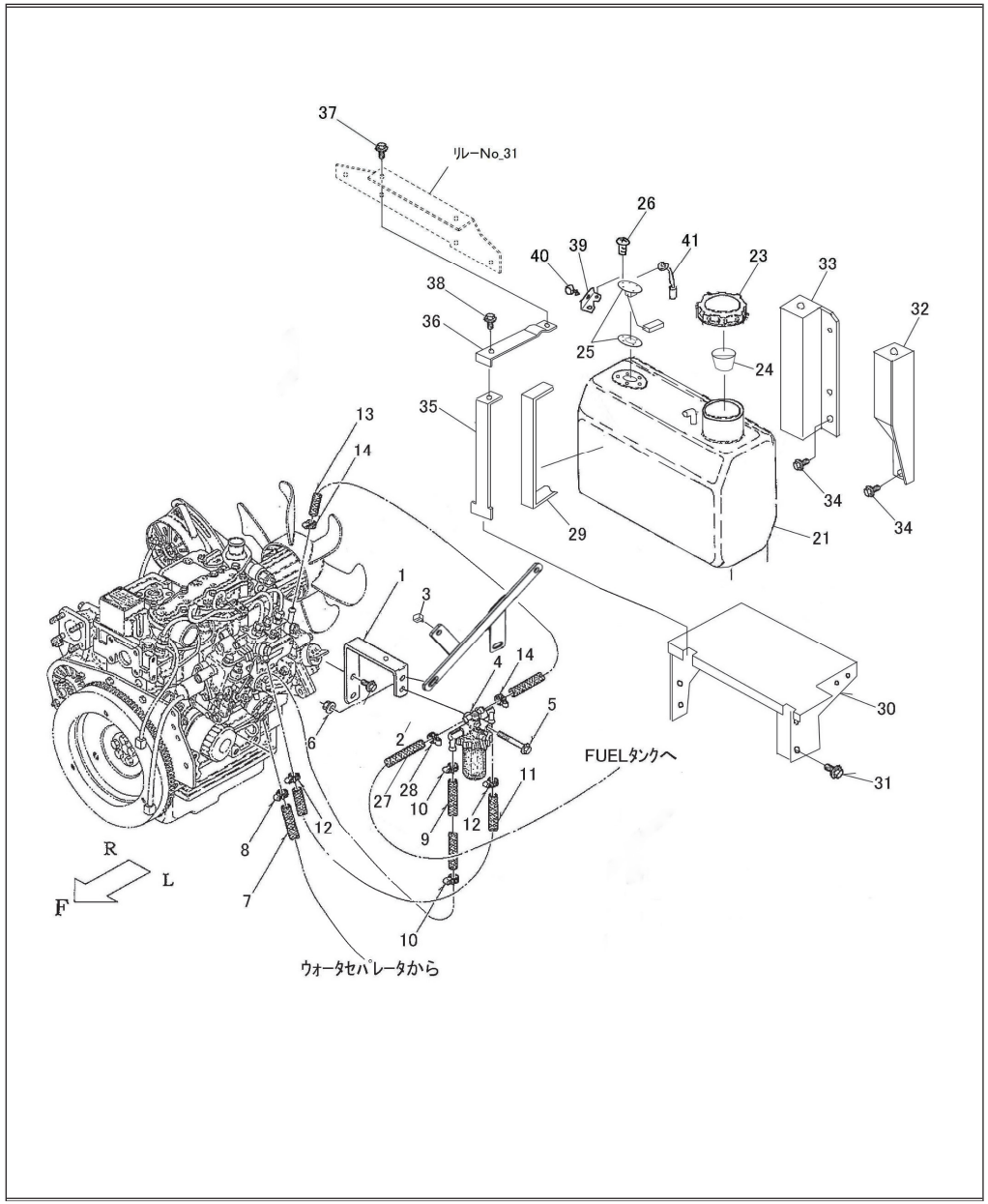

FUEL TANK

No.	Parts No.	Name	Quantity	Note
1	02906-B51-003	STAY, FILTER	1	
2	93100-0801617	BOLT, FLANGE 8×16	2	
3	91315-C1U68	CLIP, CABLE C-1U68	1	
4	119255-55620	FILTER COMP, FO	1	
5	93100-0807017	BOLT, FLANGE 8×70	1	
6	94002-08410	NUT, FLANGE 8	1	
7	91543-0750321	HOSE, BLADE 7.5×320	1	
8	91321-12	CLAMP, HOSE 12	2	
9	91543-0750171	HOSE, BLADE 7.5×170	1	
10	91324-013	BAND, HOSE 13	2	
11	91543-0750241	HOSE, BLADE 7.5×240	1	
12	91321-12	CLAMP, HOSE 12	2	
13	91543-0750201	HOSE, BLADE 7.5×200	1	
14	91321-12	CLAMP, HOSE 12	2	
15	-	-		
20	-	-		
21	04100-B84-001	TANK 20 COMP, FUEL	1	
23	02010-B50-000	CAP, FUEL	1	
24	02020-B50-000	FILTER	1	
25	04300-B78-000	SENSOR, FUEL	1	
26	93500-0501214	SCREW, PAN 5×12	5	
27	91543-0750601	HOSE, BLADE 7.5×600	1	
28	91321-12	CLAMP, HOSE 12	2	
29	02904-B07-001	RUBBER	2	
30	04200-B84-000	BASE COMP, TANK	1	
31	93300-1001617	BOLT, FLANGE 10×1.25×16	4	
32	04300-B84-000	STAY L COMP, TANK	1	
33	04400-B84-000	STAY R COMP, TANK	1	
34	93100-0802017	BOLT, FLANGE 8×20	4	
35	04500-B84-000	BAND COMP, TANK	2	
36	04901-B84-000	CLAMP, TANK	2	
37	93100-0802017	BOLT, FLANGE 8×20	2	
38	93100-0802517	BOLT, FLANGE 8×25	2	
39	04905-B78-001	STAY, GAUGE HARNESS	1	
40	91315-C4397	CLIP, CABLE C-4397	1	
41	87300-B18-000	CORD, EARTH	1	

RADIATOR (1)

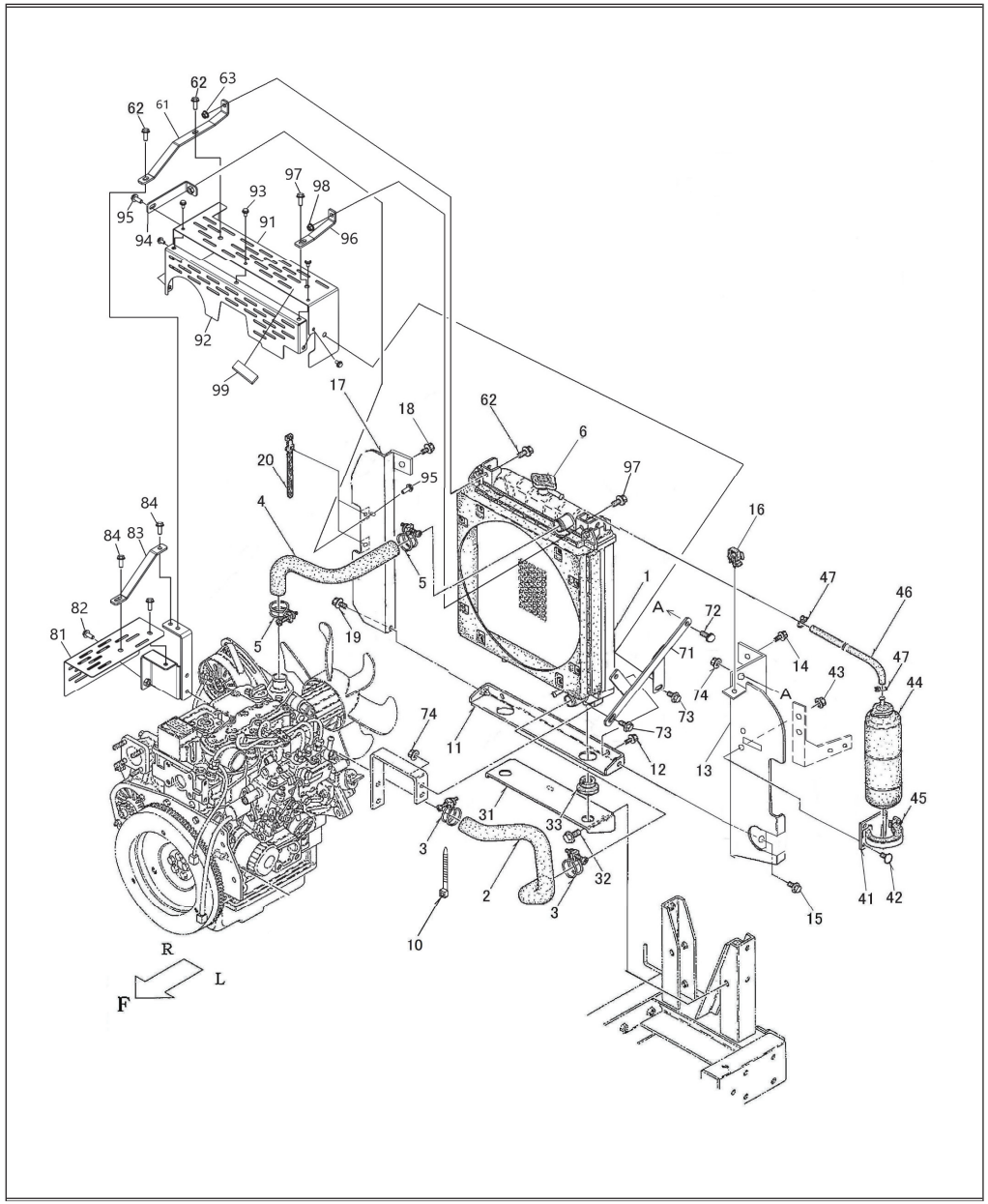

RADIATOR (1)

No.	Parts No.	Name	Quantity	Note
1	119802-44500	RADIATOR COMP	1	
2	119960-49020	CW-T, B	1	
3	23010-038000	BAND, HOSE 38	2	
4	119960-49010	CW-T, A	1	
5	23010-038000	BAND, HOSE 38	2	
10	91311-250	BAND, REPEAT RF250	1	
11	03200-B54-001	LOWER FRAME COMP, RADIATOR	1	
12	93100-0601617	BOLT, FLANGE 6×16	2	
13	03901-B84-001	FRAME L COMP, RADIATOR	1	
14	93100-0601617	BOLT, FLANGE 6×16	1	
15	93100-0801617	BOLT, FLANGE 8×16	1	
16	91315-C1J77	CLIP, CABLE C-1J77	1	
17	03906-B84-000	FRAME R, RADIATOR	1	
18	93100-0601617	BOLT, FLANGE 6×16	1	
19	93100-0801617	BOLT, FLANGE 8×16	1	
20	91314-11765	STRAP, CABLE 1-1765	2	
21	-	-		
30	-	-		
31	03100-B84-000	BASE COMP, RADIATOR	1	
32	93300-1002017	BOLT, FLANGE 10×1.25×20	2	
33	119255-44660	RUBBER, ANTIVIBRATION (RADIATOR)	2	
40	-	-		
41	121256-44600	BRACKET, SUB TANK	1	
42	93400-0801614	BOLT, SPECIAL 8×16	2	
43	94002-08410	NUT, FLANGE 8	2	
44	124450-44510	TANK COMP, SUB	1	
45	124450-44550	BAND, SUB TANK	1	
46	124766-59530	FOT	1	
47	121250-44590	CLIP, HOSE	2	
48	-	-		

RADIATOR (2)

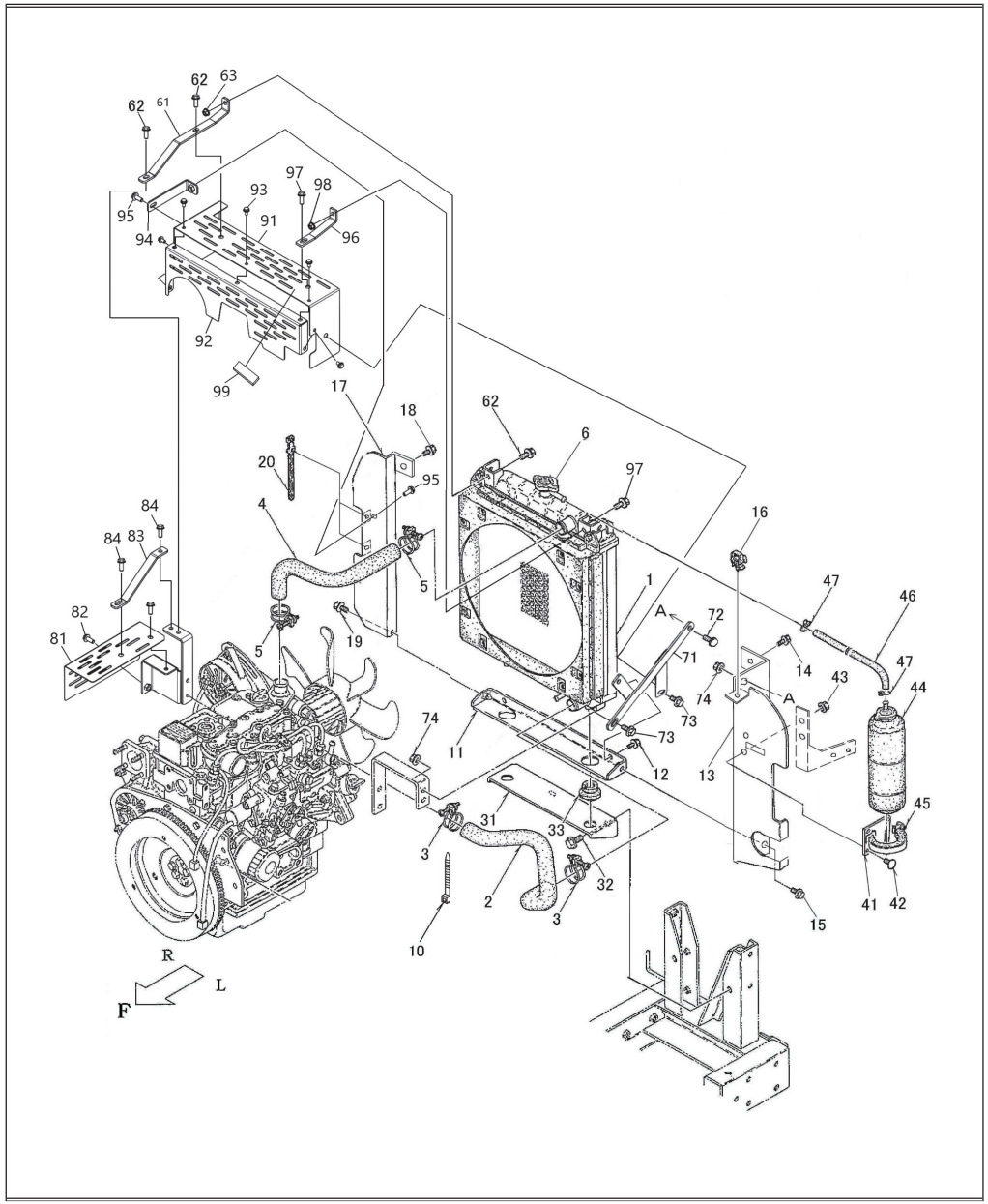

RADIATOR (2)

No.	Parts No.	Name	Quantity	Note
60	-	-		
61	03908-B84-000	STAY R, RADIATOR	1	
62	93100-0802017	BOLT, FLANGE 8×20	3	
63	94002-08410	NUT, FLANGE 8	1	
64	-	-		
65	-	-		
71	03800-B84-001	STAY L COMP, RADIATOR	1	
72	93400-0801614	BOLT, SPECIAL 8×16	1	
73	93100-0802017	BOLT, FLANGE 8×20	2	
74	94002-08410	NUT, FLANGE 8	2	
80	-	-		
81	05300-B84-000	COVER COMP, MANIFOLD	1	
82	93100-0802017	BOLT, FLANGE 8×20	3	
83	05902-B84-000	STAY B, MANIFOLD COVER	1	
84	93100-0802017	BOLT, FLANGE 8×20	2	
91	03400-B84-000	COVER A COMP, FAN	1	
92	03500-B84-000	COVER B COMP, FAN	1	
93	93100-0601217	BOLT, FLANGE 6×12	5	
94	03600-B84-000	STAY R COMP, FAN	1	
95	93100-0802017	BOLT, FLANGE 8×20	2	
96	03907-B84-000	STAY L. COVER	1	
97	93100-0802017	BOLT, FLANGE 8×20	2	
98	94002-08410	NUT, FLANGE 8	1	
99	03905-B84-000	RUBBER, 100×25×3	1	

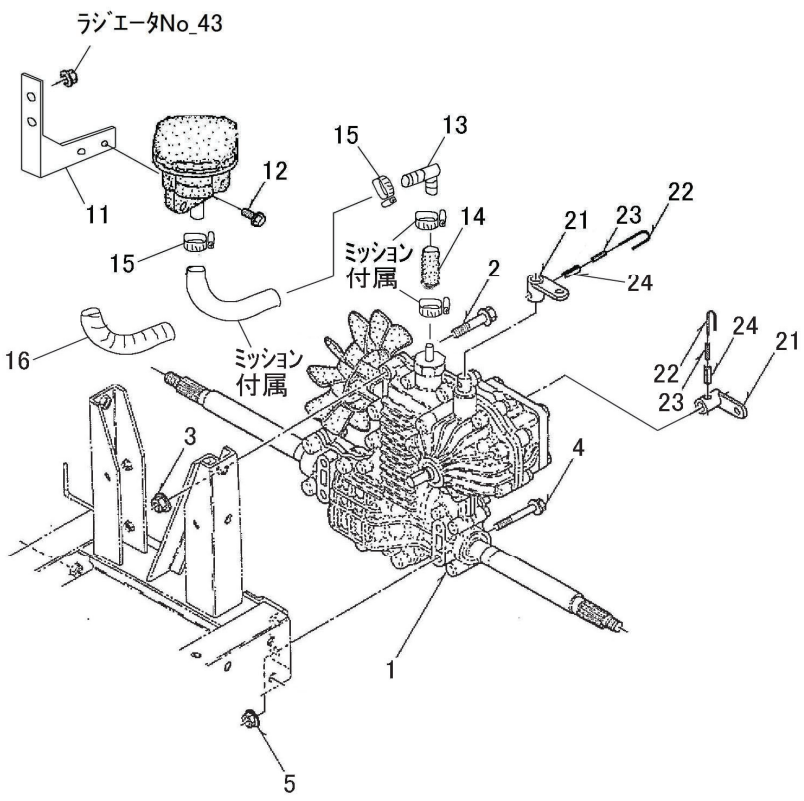

No.	Parts No.	Name	Quantity	Note
1	10001-B51-033	MISSION, SB-6HN	1	
2	93300-1005017	BOLT, FLANGE 10×1.25×50	1	
3	94006-10410	NUT, FLANGE 10×1.25	1	
4	93100-0807017	BOLT, FLANGE 8×70	4	
5	94002-08410	NUT, FLANGE 8	4	
11	11100-B84-000	STAY COMP, SUB TANK	1	
12	93100-0802017	BOLT, FLANGE 8×20	2	
13	11901-B84-000	JOINT, HOSE WS-12	1	
14	91542-1300501	HOSE, 13×50	1	
15	91323-019	CLAMP, HOSE 19	2	
16	91382-1902001	CORRUGATE 19×200	1	
17	-	-		
20	-	-		
21	75300-B66-003	ARM COMP, CHANGE	2	
22	75913-B18-000	WIRE, SPECIAL 1.2×100	2	
23	94319-35025	PIN, SPG 3.5×25	2	
24	94319-60025	PIN, SPG 6×25	2	

CRAWLER

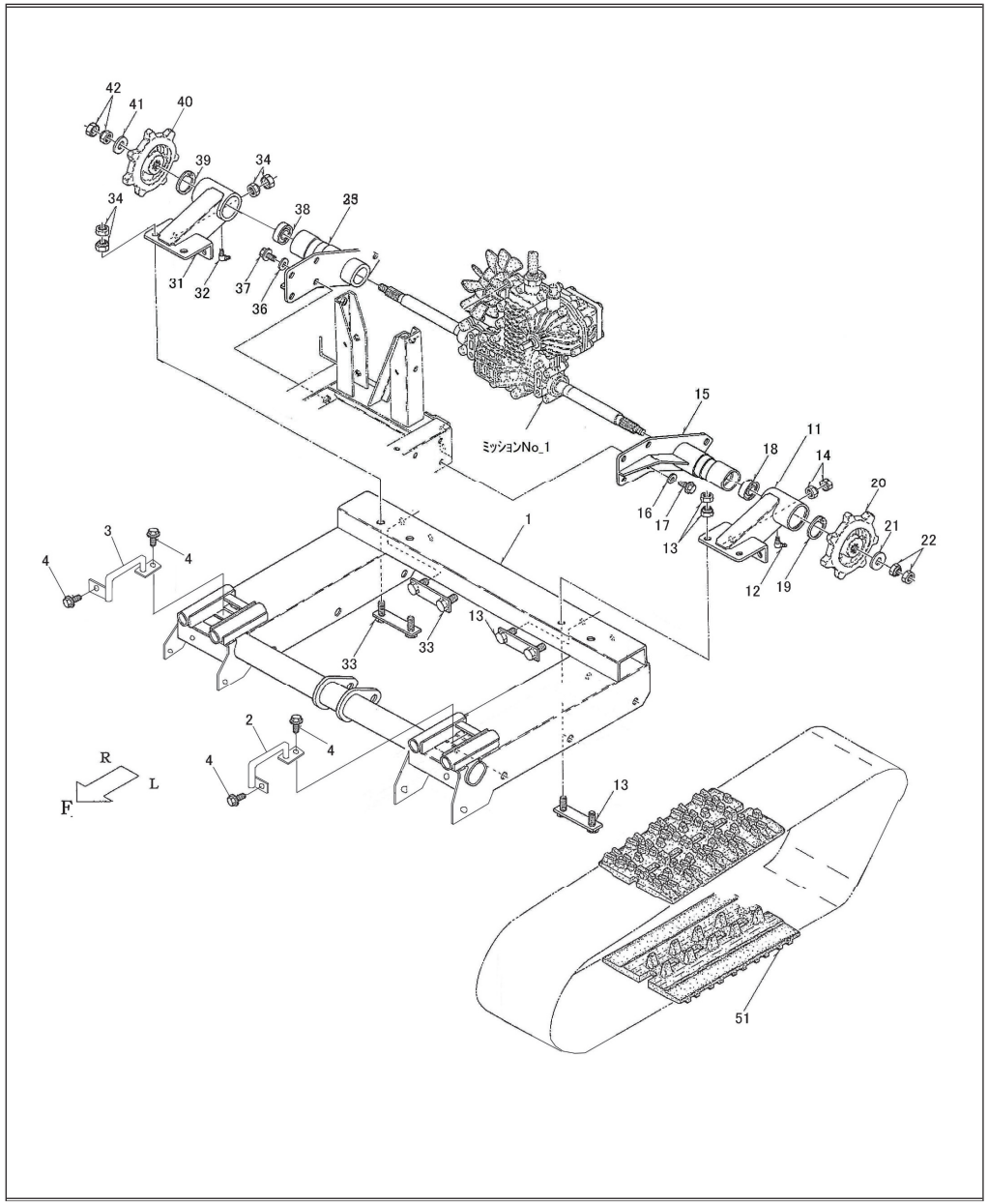

CRAWLER

No.	Parts No.	Name	Quantity	Note
1	21100-B84-003	FRAME COMP, CRAWLER	1	
2	23100-B84-000	GUIDE L COMP, CRAWLER	1	
3	23200-B84-000	GUIDE R COMP, CRAWLER	1	
4	93100-0802017	BOLT, FLANGE 8×20	4	
11	21200-B51-002	SUPPORT L COMP, AXLE	1	
12	96381-65000	NIPPLE, GREASE B-M6×1	1	
13	21800-B51-000	BOLT COMP, SET	2	
14	91235-14100	NUT, HARD LOCK 14	4	
15	21400-B51-001	HOUSING L COMP, SHAFT	1	
16	94101-10015	WASHER, PLAIN 10	4	
17	93300-1002517	BOLT, FLANGE 10×1.25×25	4	
18	96105-06204	BEARING, 6204UU	1	
19	94520-55080	CIRCLIP, IN 55	1	
20	26901-B07-001	SPROCKET, DRIVE	1	
21	91251-1640601	WASHER, RD 16×40×6.0	1	
22	91235-16100	NUT, HARD LOCK 16	1	
24	-	-		
30	-	-		
31	21300-B51-002	SUPPORT R COMP, AXLE	1	
32	96381-65000	NIPPLE, GREASE B-M6×1	1	
33	21800-B51-000	BOLT COMP, SET	2	
34	91235-14100	NUT, HARD LOCK 14	4	
35	21500-B51-001	HOUSING R COMP, SHAFT	1	
36	94101-10015	WASHER, PLAIN 10	4	
37	93300-1002517	BOLT, FLANGE 10×1.25×25	4	
38	96105-06204	BEARING, 6204UU	1	
39	94520-55080	CIRCLIP, IN 55	1	
40	26901-B07-001	SPROCKET, DRIVE	1	
41	91251-1640601	WASHER, RD 16×40×6.0	1	
42	91235-16100	NUT, HARD LOCK 16	1	
46	-	-		
48	-	-		
51	23901-B82-000	CRAWLER, 200×72×35	2	

WHEEL

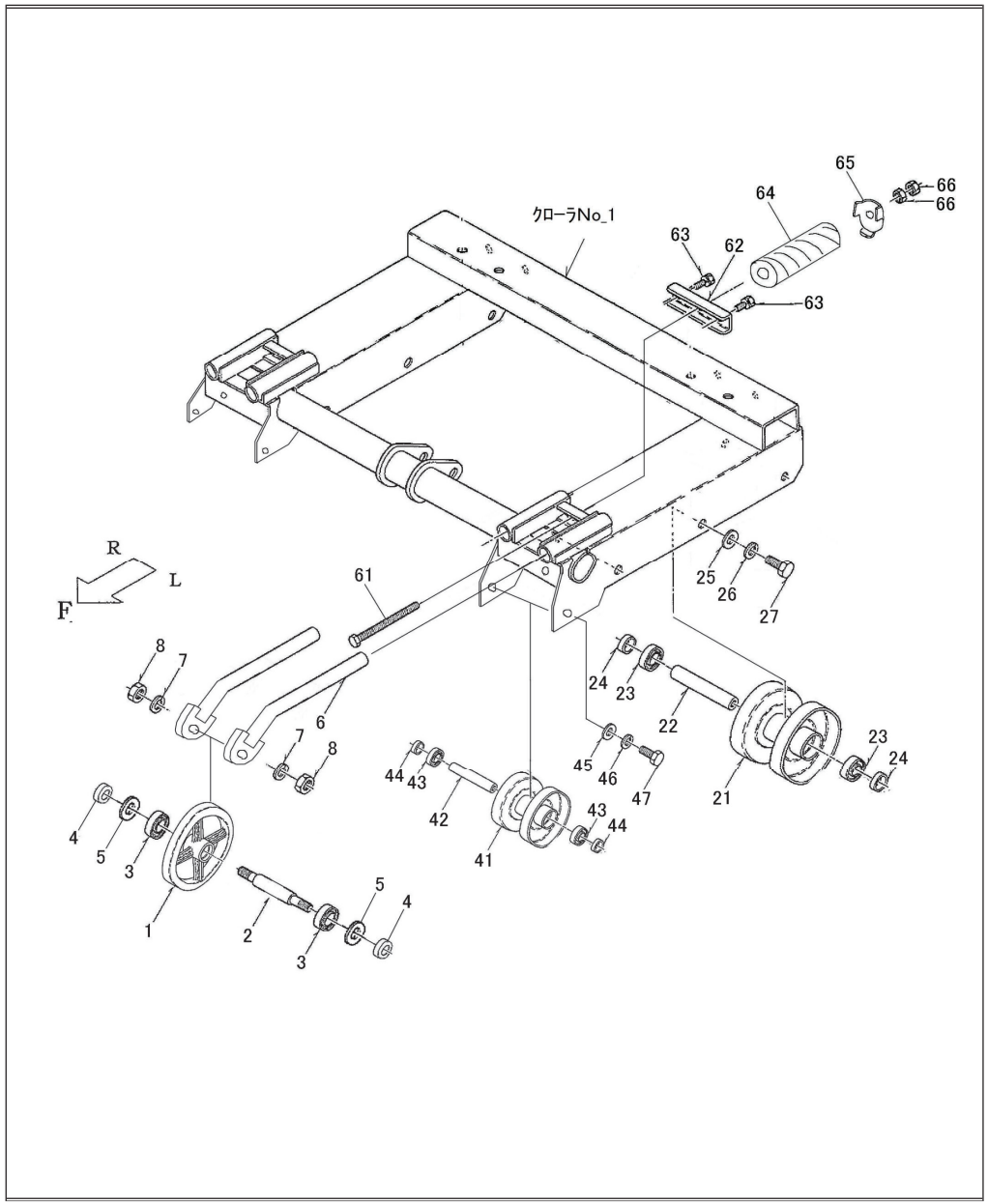

WHEEL

No.	Parts No.	Name	Quantity	Note
1	26902-A01-000	WHEEL, DRIVEN	2	
2	24902-B84-000	SHAFT, FRONT WHEEL	2	
3	96105-06004	BEARING, 6004UU	4	
4	71909-G23-001	COLLAR, 20×19	4	
5	91251-2030321	WASHER, RD 20×30×3.2	4	
6	21300-B84-000	ARM COMP, WHEEL	4	
7	94111-16012	WASHER, SPG 16	4	
8	94001-16411	NUT, 16	4	
20	-	-		
21	26100-B51-001	WHEEL COMP, CRAWLER	6	
22	24901-B51-000	SHAFT, WHEEL	6	
23	96105-06005	BEARING, 6005UU	12	
24	24902-B51-000	COLLAR, WHEEL	12	
25	94101-14010	WASHER, PLAIN 14	12	
26	94111-14012	WASHER, SPG 14	12	
27	92000-1403517	BOLT, 14×35	12	
40	-	-		
41	26100-B84-000	WHEEL COMP, EQUALIZE	2	
42	24901-B84-001	SHAFT, WHEEL	2	
43	96105-06004	BEARING, 6004UU	4	
44	71909-G23-001	COLLAR, 20×19	4	
45	94101-12010	WASHER, PLAIN 12	4	
46	94111-12012	WASHER, SPG 12	4	
47	92000-1202517	BOLT, 12×25	4	
60	-	-		
61	21500-B84-000	BOLT COMP, TENSION	2	
62	21901-B51-000	SUPPORT, TENSION BEAM	2	
63	91219-1020111	BOLT, SPECIAL 10×1.25×20	4	
64	23901-B18-000	SPRING, BJ 50×100	2	
65	21902-B54-000	HOLDER, SPRING	2	
66	94003-12412	NUT, SPECIAL 12	4	

AUGER HOUSING

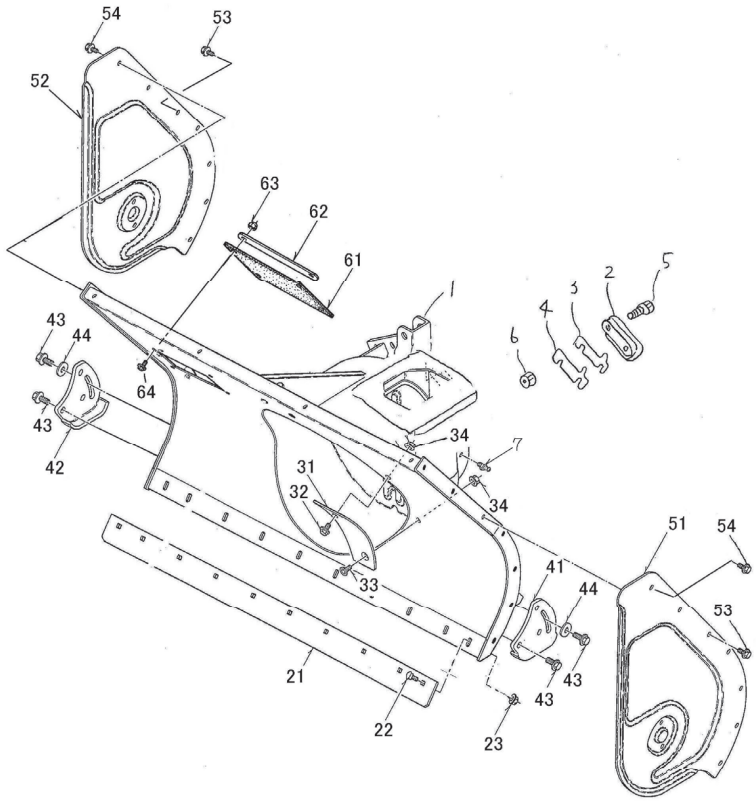

AUGER HOUSING

No.	Parts No.	Name	Quantity	Note
1	31100-B82-034	HOUSING COMP, AUGER	1	
2	31400-B18-000	GUIDE COMP, ROLLING	4	
3	31902-B18-000	SHIM	16	
4	31903-B18-000	SHIM, 0.6	4	
5	93300-1204517	BOLT, FLANGE 12×1.25×45	8	
6	94006-12410	NUT, FLANGE 12×1.25	8	
7	96381-20000	NIPPLE, GREASE A-MT6×1	2	
20	-	-		
21	31901-B51-000	EDGE	1	
22	92600-0802014	BOLT, SPECIAL 8×20	10	
23	94002-08410	NUT, FLANGE 8	10	
30	-	-		
31	31902-A90-001	PLATE	1	
32	93100-0802017	BOLT, FLANGE 8×20	1	
33	91217-0801679	SCREW 8×16	1	
34	94002-08410	NUT, FLANGE 8	2	
40	-	-		
41	31901-B16-000	SKID L	1	
42	31902-B16-000	SKID R	1	
43	93300-1002517	BOLT, FLANGE 10×1.25×25	4	
44	94101-10015	WASHER, PLAIN 10	2	
50	-	-		
51	38903-B82-001	COVER L, AUGER SIDE	1	
52	38904-B82-001	COVER R, AUGER SIDE	1	
53	93100-0801617	BOLT, FLANGE 8×16	10	
54	93100-0802017	BOLT, FLANGE 8×20	4	
60	-	-		
61	39901-B66-000	PLATE, WINDOW	2	
62	39902-B66-001	PLATE	4	
63	91233-064010	NUT, SPECIAL 6	8	
64	93100-0601617	BOLT, FLANGE 6×16	8	

CHUTE

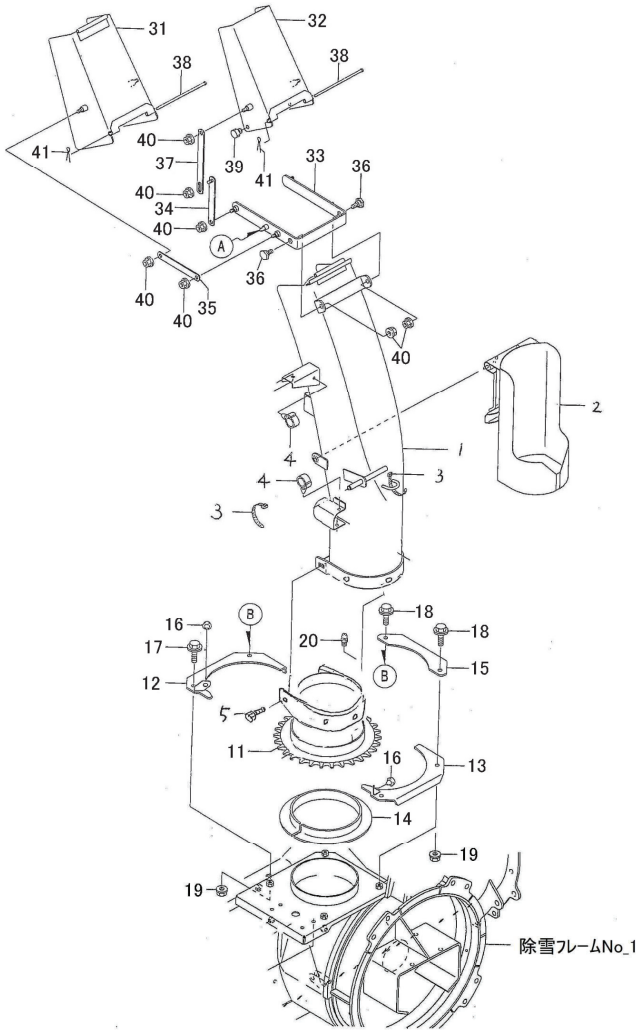

CHUTE

No.	Parts No.	Name	Quantity	Note
1	33100-B82-003	CHUTE COMP, 900	1	
2	33200-B50-003	COVER COMP, CARTRIDGE	1	
3	91311-140	BAND, REPEAT RF140	2	
4	91315-C4397	CLIP, CABLE C-4397	2	
5	93100-0801217	BOLT, FLANGE 8×12	5	
10	-	-		
11	33200-B82-004	BASE COMP, CHUTE	1	
12	33300-B72-003	STOPPER F COMP, CHUTE	1	
13	33400-B72-003	STOPPER R COMP, CHUTE	1	
14	33903-B72-001	RING	1	
15	33906-B72-004	GUIDE, STOPPER	1	
16	33907-B72-000	RUBBER	2	
17	93300-1003017	BOLT, FLANGE 10×1.25×30	2	
18	93300-1003517	BOLT, FLANGE 10×1.25×35	2	
19	94006-10410	NUT, FLANGE 10×1.25	4	
20	96381-20000	NIPPLE, GREASE A-MT6×1	1	
30	-	-		
31	33300-B53-000F1	DEFLECTOR A COMP, CHUTE	1	
32	33400-B53-000F1	DEFLECTOR B COMP, CHUTE	1	
33	33500-B72-001	ARM COMP, CHUTE	1	
34	33600-B53-000	LINK A COMP, CHUTE	2	
35	33902-B53-000	ARM 129, LINK	2	
36	33904-B53-000	BOLT, SPECIAL	2	
37	33908-B72-002	LINK B, CHUTE	2	
38	91262-061650	PIN, CHUTE 6×165	2	
39	91361-18N0	PLUG, HOLE 18N0	2	
40	94002-08410	NUT, FLANGE 8	12	
41	94210-20120	PIN, SPLIT 2×12	2	
42	-	-		

CHUTE MOTOR

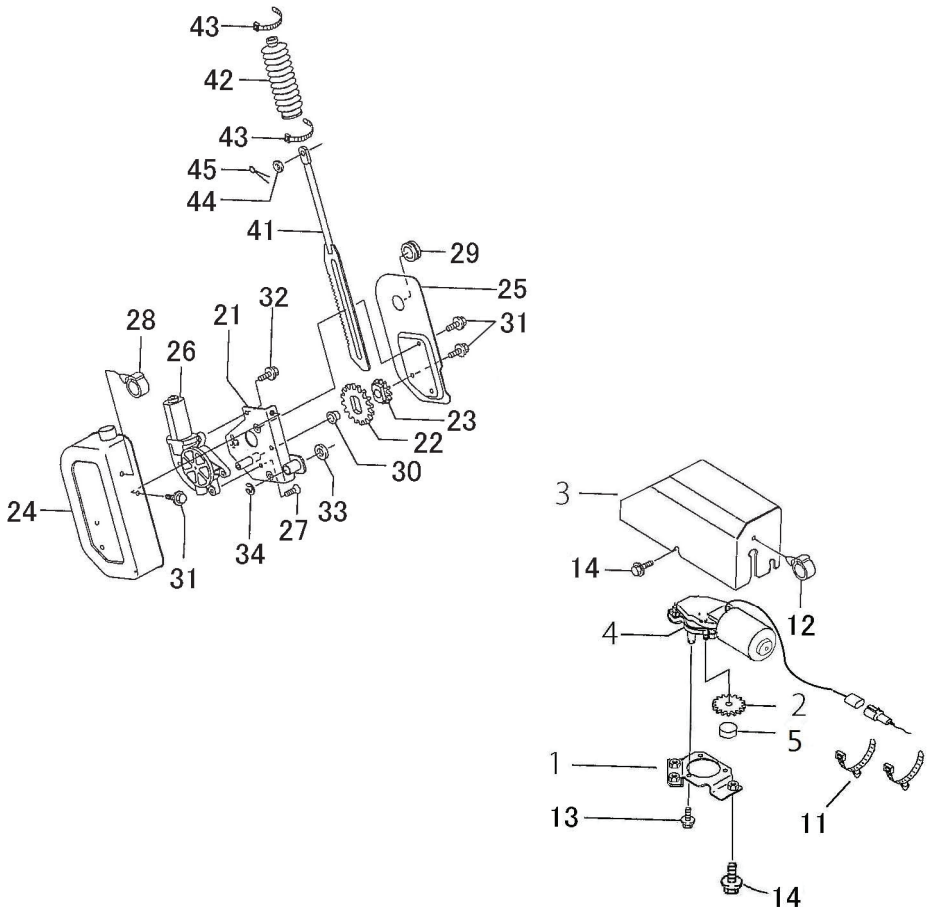

CHUTE MOTOR

No.	Parts No.	Name	Quantity	Note
1	31300-B72-030	BRACKET, MOTOR	1	
2	33905-B72-031	GEAR, MOTOR	1	
3	38200-B72-002	COVER COMP, MOTOR	1	
4	81100-B82-001	MOTOR, 8157	1	
5	38902-B72-000	WHEEL, NYLON	1	
10	-	-		
11	91314-119P7	STRAP, CABLE 1-19P7	2	
12	91315-C4397	CLIP, CABLE C-4397	1	
13	93100-0601617	BOLT, FLANGE 6×16	3	
14	93100-0801617	BOLT, FLANGE 8×16	6	
20	-	-		
21	33700-B72-003	BRACKET A COMP, MOTOR	1	
22	33902-B56-002	GEAR, M2×32	1	
23	33903-B56-003	GEAR, M2×18	1	
24	38100-B72-001	COVER COMP, MOTOR	1	
25	38905-B72-001	COVER, MOTOR	1	
26	81100-B53-002	MOTOR, JC578VA	1	
27	91217-0601674	SCREW, 6×16	1	
28	91315-C4397	CLIP, CABLE C-4397	1	
29	91358-1202515	BUSH, RUBBER NG-79-N	1	
30	91644-121080	BUSH, 80F-1210	1	
31	93100-0601217	BOLT, FLANGE 6×12	6	
32	93100-0601617	BOLT, FLANGE 6×16	3	
33	94101-12010	WASHER, PLAIN 12	1	
34	94511-09010	RING E, 9	1	
40	-	-		
41	34200-B72-003	RACK COMP, CHUTE	1	
42	33904-B08-000	BOOT, CHUTE	1	
43	91316-2140	BAND, CABLE CV-140SW	2	
44	94101-08010	WASHER, PLAIN 8	1	
45	94210-25150	PIN, SPLIT 2.5×15	1	

AUGER GEAR CASE

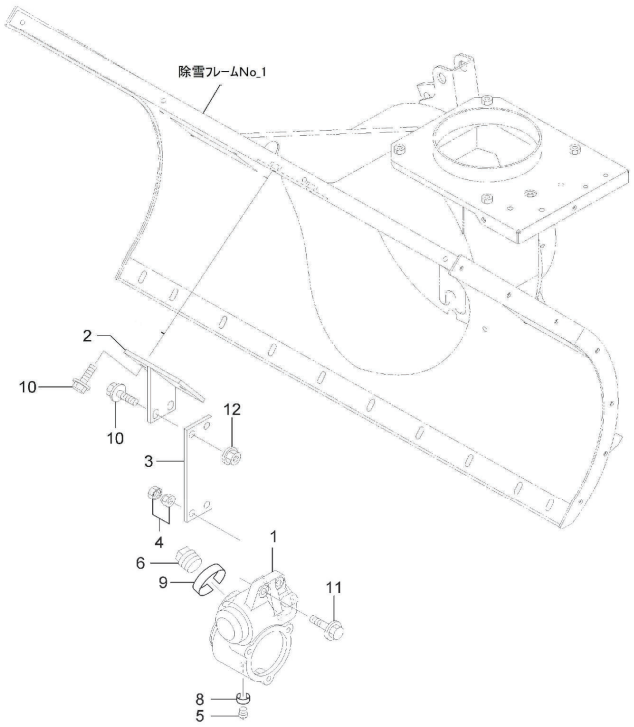

AUGER GEAR CASE

No.	Parts No.	Name	Quantity	Note
1	34903-B50-000	CASE, AUGER GEAR	1	
2	31200-B50-001	SUPPORT COMP, GEAR CASE	1	
3	31903-B50-000	PLATE, GEAR CASE SUPPORT	1	
4	91235-10110	NUT, HARD LOCK 10×1.25	2	
5	91555-0141	PLUG, PT1/8	1	
6	91555-0641	PLUG, PT3/4	1	
8	91941-050	TAPE 50, SEAL	1	
9	91941-150	TAPE 150, SEAL	1	
10	93300-1002517	BOLT, FLANGE 10×1.25×25	4	
11	93300-1004017	BOLT, FLANGE 10×1.25×25	2	
12	94006-10410	NUT, FLANGE 10×1.25	2	
13	31903-B72-000	SHIM, 1	2	
14	31904-B72-000	SHIM, 2	1	

AUGER SHAFT

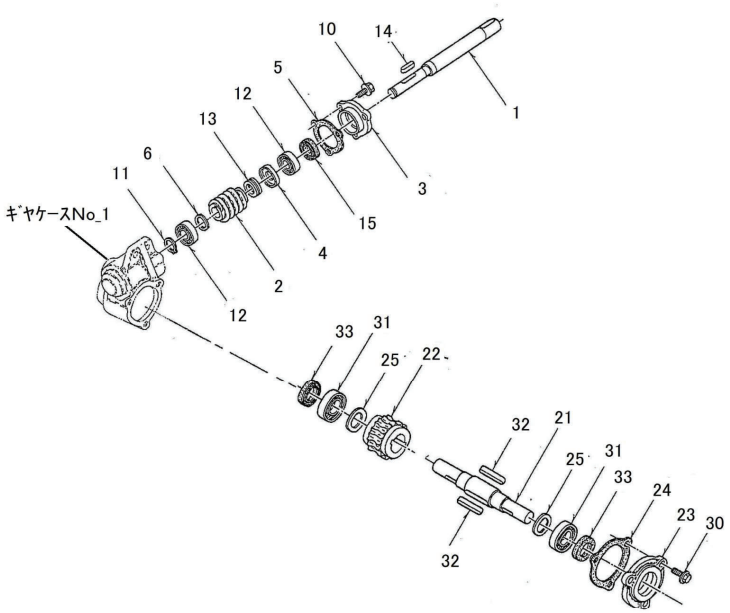

AUGER SHAFT

No.	Parts No.	Name	Quantity	Note
1	32903-A90-002	SHAFT, AUGER INPUT	1	
2	73251-V15-F002	GEAR, DRIVE	1	
3	31904-A31-001	COVER A, AUGER GEAR CASE	1	
4	34902-B27-000	COLLAR, THRAST	1	
5	39901-A31-002	PACKING A, AUGER GEAR CASE	1	
6	91912-A05-001	WASHER, RD 20×30×2	1	
10	93100-0802017	BOLT, FLANGE 8×20	3	
11	94510-20080	CIRCLIP, EX 20	1	
12	96100-06004	BEARING, 6004	2	
13	96200-051204	BEARING, 51204	1	
14	97113-038241	KEY, 6×6×38RR	1	
15	98251-2503807	SEAL, OIL D25387	1	
20	-	-		
21	34901-B08-001	SHAFT, AUGER	1	
22	32902-A90-000	WORM WHEEL, M3×20	1	
23	31905-A31-000	COVER B, AUGER GEAR CASE	1	
24	39902-A31-002	PACKING B, AUGER GEAR CASE	1	
25	91302-A31-000	WASHER, RD 30×42×2	2	
30	93100-0802517	BOLT, FLANGE 8×25	3	
31	96100-06006	BEARING, 6006	2	
32	97116-048241	KEY, 10×8×48RR	2	
33	98251-3004508	SEAL, OIL D30458	2	

BLOWER

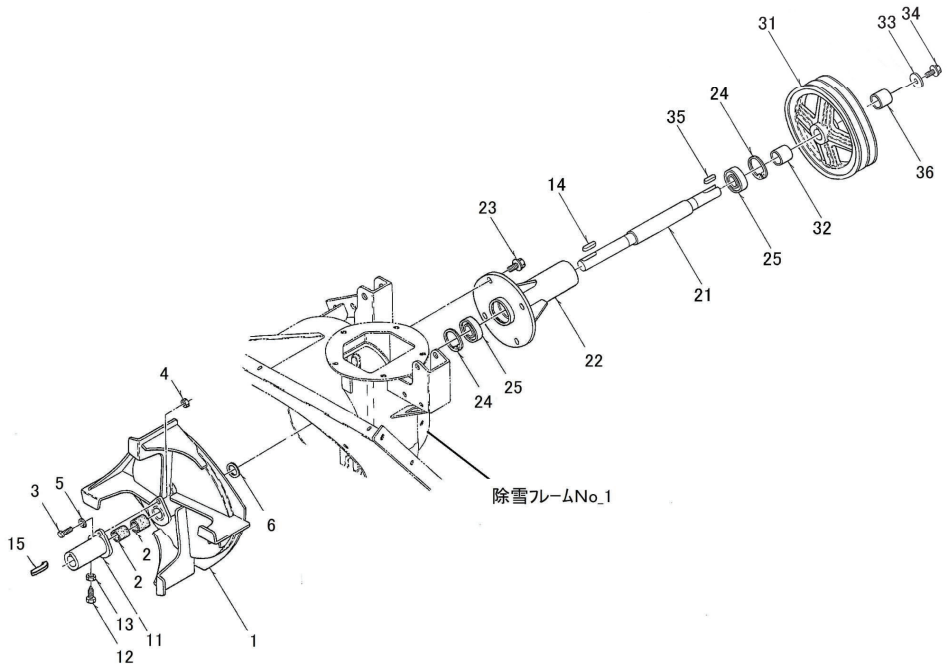

BLOWER

No.	Parts No.	Name	Quantity	Note
1	36200-B50-003	BLOWER COMP	1	
2	91646-2525R	BUSH, BM2525FS	2	
3	92201-0802514	BOLT, 8×25	1	
4	94003-08412	NUT, SPECIAL 8	1	
5	94111-08012	WASHER, SPG 8	1	
6	91251-2535231	WASHER, RD 25×35×2.3	1	
10	-	-		
11	36200-B39-000	FLANGE COMP, BLOWER SHARE	1	
12	91212-0825137	BOLT, SPECIAL 8×25	1	
13	94003-08412	NUT, SPECIAL 8	1	
14	97114-030241	KEY, 7×7×30RR	1	
15	97114-036241	KEY, 7×7×36RR	1	
20	-	-		
21	34901-B82-000	SHAFT, BLOWER	1	
22	36100-B82-000	HOUSING COMP, SHAFT	1	
23	93300-1002017	BOLT, FLANGE 10×1.25×20	4	
24	94520-52080	CIRCLIP, IN 52	2	
25	96105-06205	BEARING, 6205UU	2	
30	-	-		
31	63906-B50-001	PULLEY COMP, 210B-2×25	1	
32	34901-B84-000	COLLAR, 25×16.5	1	
33	91251-0835451	WASHER, RD 8×35×4.5	1	
34	93100-0802017	BOLT, FLANGE 8×20	1	
35	97114-028141	KEY, 7×7×28RR	1	
36	34902-B84-000	COLLAR, 25×8	1	

AUGER

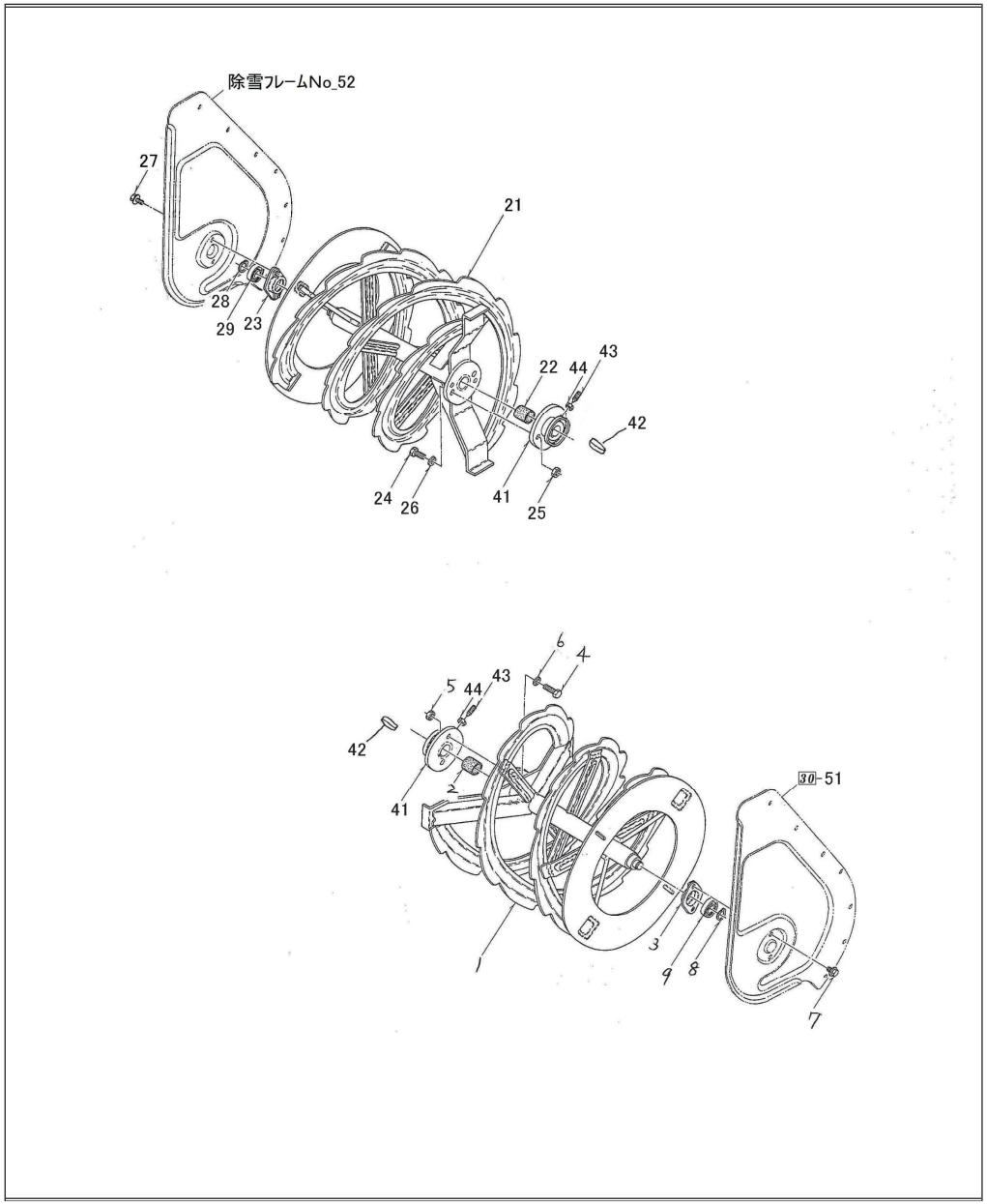

AUGER

No.	Parts No.	Name	Quantity	Note
1	35300-B28-004F1	AUGER L COMP	1	
2	91646-2830R	BUSH, BM2830FS	1	
3	35400-B01-001	CASE A COMP, BEARING	1	
4	92001-1003014	BOLT, 10×30	1	
5	94001-10412	NUT, 10	1	
6	94111-10012	WASHER, SPG 10	1	
7	93100-0801617	BOLT, FLANGE 8×16	2	
8	94510-20080	CIRCLIP, EX 20	1	
9	96105-06004	BEARING, 6004UU	1	
20	-	-		
21	35400-B28-004F1	AUGER R COMP	1	
22	91646-2830R	BUSH, BM2830FS	1	
23	35400-B01-001	CASE A COMP, BEARING	1	
24	92001-1003014	BOLT, 10×30	1	
25	94001-10412	NUT, 10	1	
26	94111-10012	WASHER, SPG 10	1	
27	93100-0801617	BOLT, FLANGE 8×16	2	
28	94510-20080	CIRCLIP, EX 20	1	
29	96105-06004	BEARING, 6004UU	1	
40	-	-		
41	35500-B84-001	FLANGE COMP, AUGER SHARE	2	
42	97115-028241	KEY, 8×7×28RR	2	
43	91221-082540	BOLT, SPECIAL 8×25	2	
44	94003-08412	NUT, SPECIAL 8	2	

FRAME

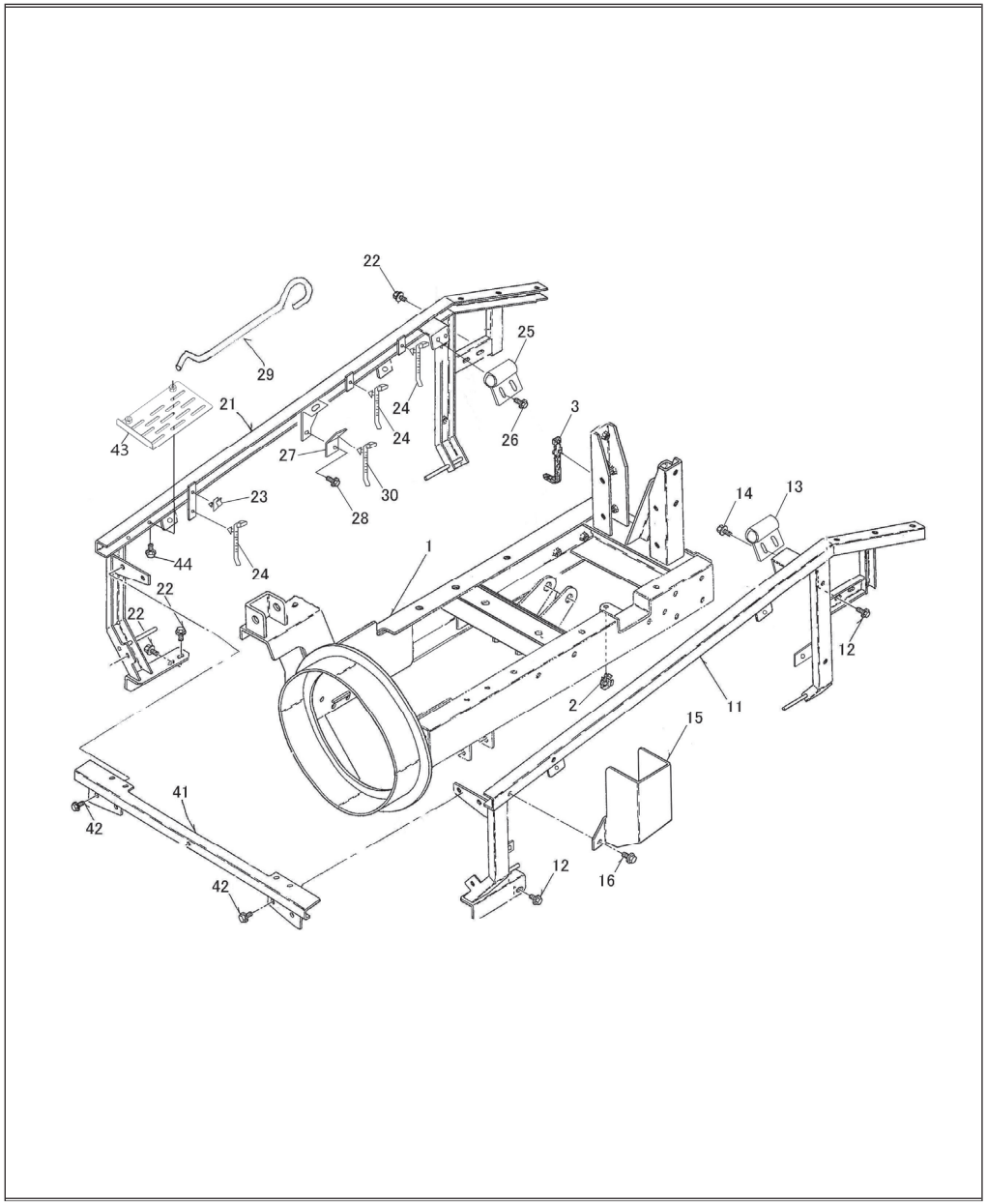

FRAME

No.	Parts No.	Name	Quantity	Note
1	41100-B84-004	FRAME COMP, MAIN	1	
2	91315-C1J77	CLIP, CABLE C-1J77	1	
3	-	-		
10	-	-		
11	48600-B84-000	FRAME L COMP, COVER	1	
12	93100-0801617	BOLT, FLANGE 8×16	4	
13	47200-B50-001	PIPE COMP, CATCH	1	
14	93100-0601617	BOLT, FLANGE 6×16	2	
15	49903-B51-000	COVER, PIPE	1	
16	93100-0801617	BOLT, FLANGE 8×16	2	
20	-	-		
21	48700-B84-000	FRAME R COMP, COVER	1	
22	93100-0801617	BOLT, FLANGE 8×16	4	
23	91315-A3455	CLIP, CABLE A-3455	1	
24	91314-11765	STRAP, CABLE 1-1765	3	
25	47200-B50-001	PIPE COMP, CATCH	1	
26	93100-0601617	BOLT, FLANGE 6×16	2	
27	86200-B84-001	BASE COMP, CLAMP	1	
28	93100-0601017	BOLT, FLANGE 6×10	1	
29	48903-B43-002	STAY, BONNET	1	
30	91314-11765	STRAP, CABLE 1-1765	1	
40	-	-		
41	48600-B51-001	FRAME COMP, FRONT	1	
42	93100-0801617	BOLT, FLANGE 8×16	4	
43	48800-B84-000	COVER R COMP, ENGINE	1	
44	93100-0601217	BOLT, FLANGE 6×12	2	

BONNET & FRONT COVER

SX1510E

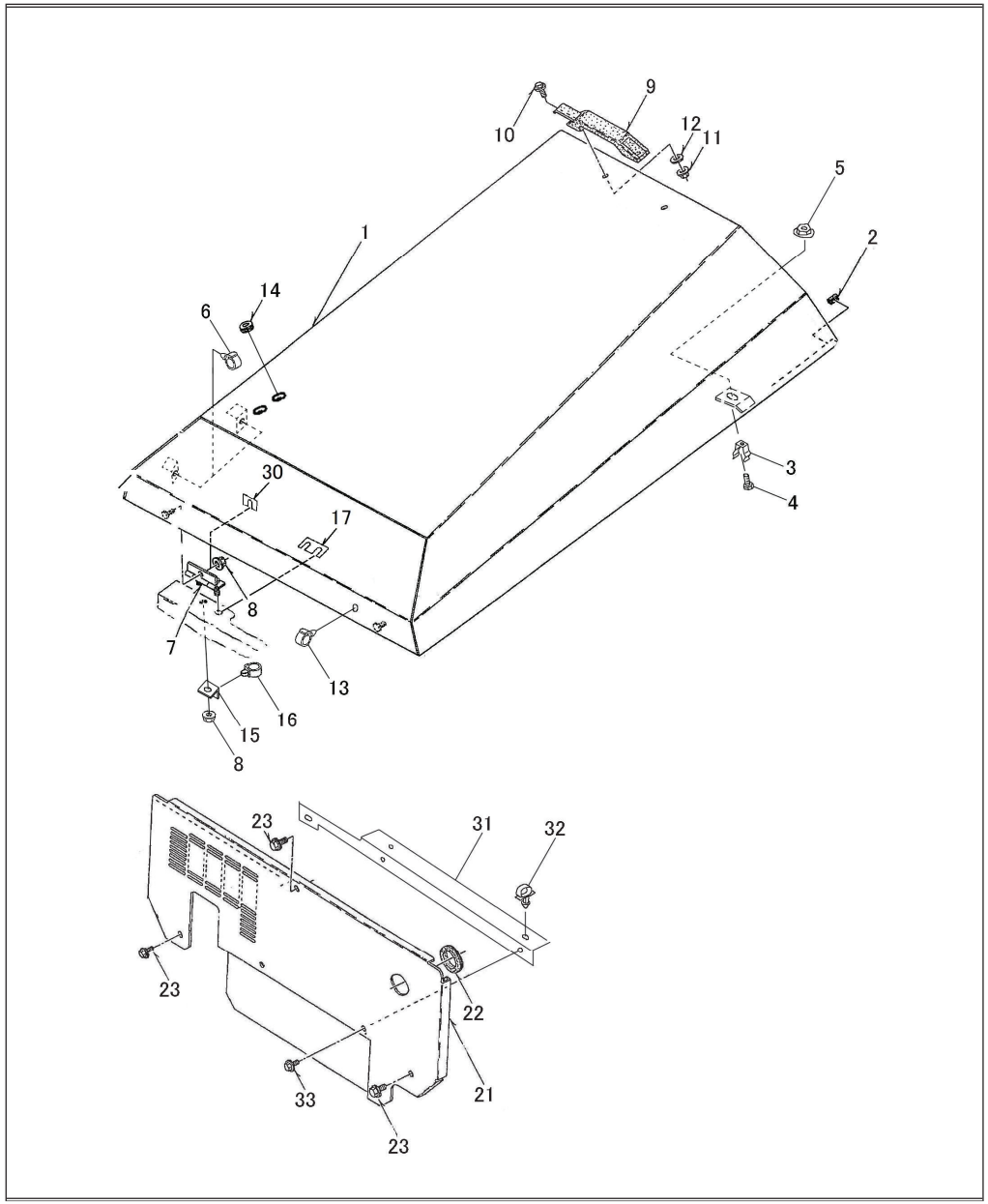

FRONT COVER

No.	Parts No.	Name	Quantity	Note
1	48100-B84-002	BONNET COMP	1	
2	91360-12015	GROMMET, TH-12(15)	2	
3	39902-A65-001	STOPPER, BAR	2	
4	92200-0801617	BOLT, 8×16	2	
5	94002-08410	NUT, FLANGE 8	2	
6	91315-C4397	CLIP, CABLE C-4397	2	
7	47500-B50-001	HINGE COMP	2	
8	94002-08410	NUT, FLANGE 8	6	
9	48904-B43-000	HANDLE, AP-829-3	1	
10	93100-0501614	BOLT, FLANGE 5×16	2	
11	94002-05410	NUT, FLANGE 5	2	
12	94101-06015	WASHER, PLAIN 6	2	
13	91315-C1E50	CLIP, CABLE C-1E50	1	
14	91351-1081020	BUSH, RUBBER BSB-21	1	
15	86901-B84-000	STAY, HARNESS	1	
16	91315-C4397	CLIP, CABLE C-4397	1	
17	42901-B84-000	SHIM 2.6	2	
20	-	-		
21	49100-B84-001	COVER COMP, FRONT	1	
22	91352-3324420	BUSH, RUBBER BW-32-2	1	
23	93100-0801617	BOLT, FLANGE 8×16	3	
30	31903-B72-000	SHIM, 1	4	
31	82500-B84-000	STAY COMP, LIGHT HARNESS	1	
32	91315-C4397	CLIP, CABLE C-4397	2	
33	93100-0601217	BOLT, FLANGE 6×12	2	

REAR COVER

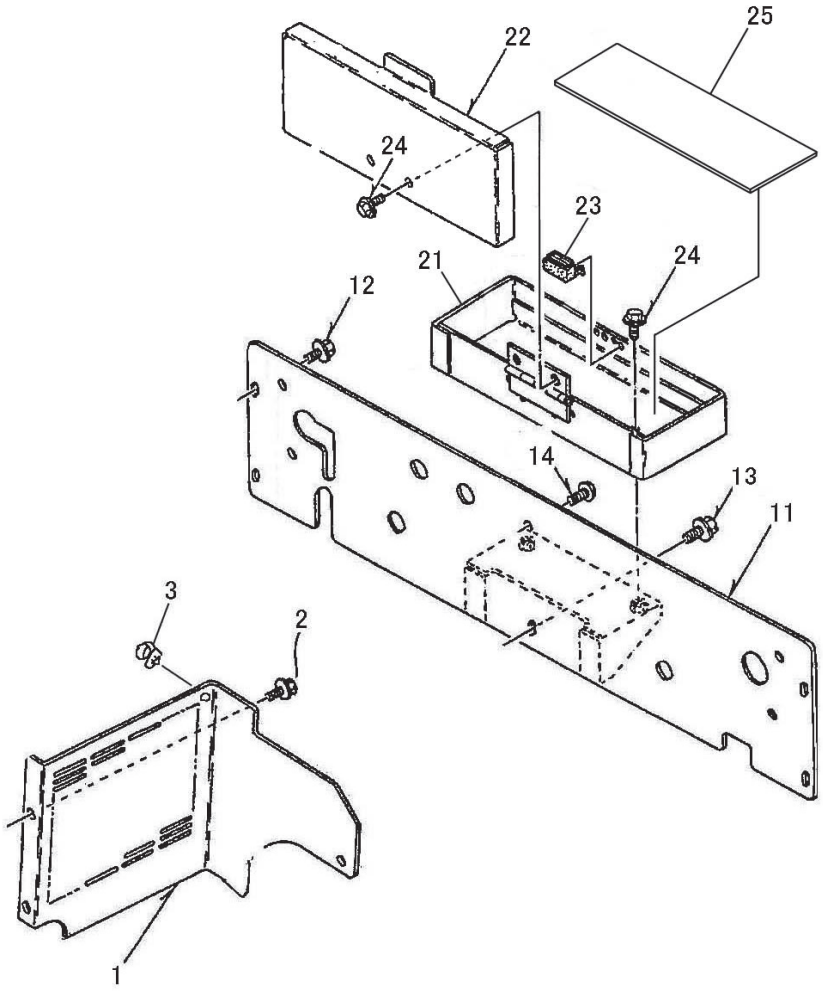

D

REAR COVER

No.	Parts No.	Name	Quantity	Note
1	48901-B51-002	COVER, FAN	1	
2	93100-0601617	BOLT, FLANGE 6×16	2	
3	91315-C2S12	CLIP, CABLE C-2S12	2	
10	-	-		
11	49700-B69-003	COVER COMP, REAR	1	
12	93100-0601217	BOLT, FLANGE 6×12	4	
13	93100-0801617	BOLT, FLANGE 8×16	1	
14	93400-0801614	BOLT, SPECIAL 8×16	1	
20	-	-		
21	42100-B72-031	BOX COMP, TOOL	1	
22	42200-B72-000	COVER COMP, TOOL BOX	1	
23	42901-B72-000	MAGNET, C-931	1	
24	93100-0601217	BOLT, FLANGE 6×12	2	
25	42901-B53-000	RUBBER	1	
26	93100-0601257	BOLT, FLANGE 6×12	2	
27	91310-150	BAND, PRT1.5S	1	

SIDE COVER

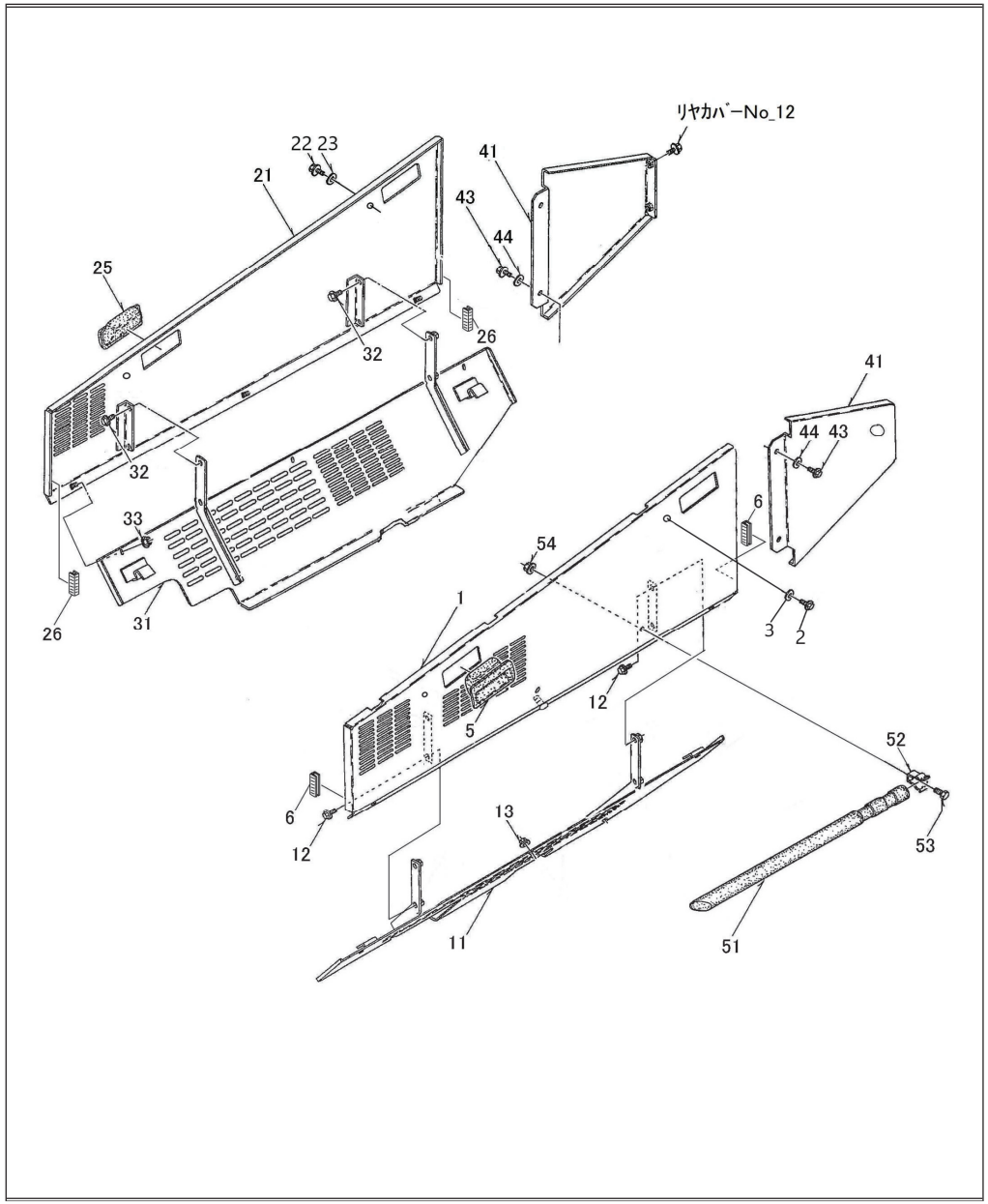

SIDE COVER

No.	Parts No.	Name	Quantity	Note
1	49700-B84-001	COVER L COMP, SIDE	1	
2	93100-0801617	BOLT, FLANGE 8×16	2	
3	94101-08015	WASHER, PLAIN 8	2	
4	-	-		
5	48901-B69-030	HANDLE, AP-197-1-3	2	
6	91360-12015	GROMMET, TH-12(15)	2	
10	-	-		
11	49400-B84-030	COVER L COMP, SIDE UNDER	1	
12	93100-0601217	BOLT, FLANGE 6×12	4	
13	94002-06410	NUT, FLANGE 6	3	
20	-	-		
21	49800-B84-001	COVER R COMP, SIDE	1	
22	93100-0801617	BOLT, FLANGE 8×16	2	
23	94101-08015	WASHER, PLAIN 8	2	
24	-	-		
25	48901-B69-030	HANDLE, AP-197-1-3	2	
26	91360-12015	GROMMET, TH-12(15)	2	
30	-	-		
31	49500-B84-030	COVER R COMP, SIDE UNDER	1	
32	93100-0601217	BOLT, FLANGE 6×12	4	
33	94002-06410	NUT, FLANGE 6	3	
40	-	-		
41	49700-B51-003	COVER R COMP, REAR SIDE	2	
42	-	-		
43	93100-0601617	BOLT, FLANGE 6×16	4	
44	94101-06015	WASHER, PLAIN 6	4	
50	-	-		
51	39901-B51-001	BAR, SNOW DROP	1	
52	39902-A65-001	STOPPER, BAR	2	
53	92200-0801617	BOLT, 8×16	2	
54	94002-08410	NUT, FLANGE 8	2	